Conveyor Belt Misalignment Switch

MRS 201

with DUPLINE-bus terminal

Leaflet No. **Kiepe 473**

APPLICATION

Kiepe Belt Misalignment Switches MRS 201 are used in conveyor installations for monitoring the true running of conveyor belts. When mounted at the running edges of a conveyor belt, the switches will be operated if the belt deviates from its designed running line by more than a permissible distance. The switches will then stop the conveyor drive avoiding spillage of material or damage to the plant. The stainless steel roller (∅ 30 mm) permits the monitoring of fast running conveyors up to 5m/s.

Constructed from fibre reinforced plastic and stainless steel the MRS 201, being resistant to ammonia can successfully operate in extreme and harsh environments such as salt mines, composting, recycle plants as well as port and harbour areas.

The device is intended for use in stationary installations and in vehicles.

MONITORING

The MRS 201 provides two pre-set trip points at 10° and 25° in both directions. Two switching elements activate the integrated bus node of the Dupline field and installation bus of the Carlo Gavazzi company. The Dupline system offers an economic solution to locate actuated switches within large conveying systems.
Up to 128 independent signals can be transmitted via merely two wires of the Dupline-bus towards any direction over several kilometers.

By means of a manual coder an address will be applied to each pull rope switch.

The channel generator continously transmits the digital pulse code (the Dupline carrier signal) to the Dupline network.
It synchronises the system via the clock pulse and time control of all bus participants connected to the system. It enables the connection to all important upper-level control systems, e.g. Profibus-DP, DeniceNet and others.

The Dupline system offers an economic solution to locate actuated pull rope switches within large conveying systems.

TECHNICAL DATA

Device complies with	EN 60947-5-1 VDE 0110
Housing	Ultramid A3EG5 (PA, fibre reinforced)
Finish	yellow, RAL 1004
Mounting	2 bolts M 6
Ambient Temperature	- 25 °C ... + 70 °C
Trip points	10° und 25°
Protection	IP 65 according to EN 60529
Cable Entry	3 x M 25 x 1,5
Excursion	75° max.
Connection	2,5 mm^2 max.
Bus Terminal	Operating Voltage via Dupline-bus
Nominal Current Consumption	with LED's switched off: typ. 150 µA with LED's switched on: typ. 2,4 mA
Weight	820 g
Order Number	91.055 301.201

MOUNTING INSTRUCTIONS

Belt Misalignment Switches protect equipment by shutting down the conveyor when the belt mistracks preventing material spillage and costly clean-up. Not less than two switches shall be furnished on each end of the conveyor. One pair located near the headpulley on the carry side and another pair located next to the tailpulley on the return side.

CONNECTING DIAGRAM

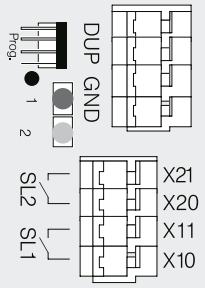

DUP	Dupline-Bus: PLUS
GND	Dupline-Bus: MINUS
Prog.	Programming plug

Contacts X10, X11, X20 and X21 are connected in parallel to the internal switching elements S1 and S2. This allows a second conventional Misalignment Switch, installed on the opposite side of the belt to activate the same Dupline bus node.

DIMENSIONS

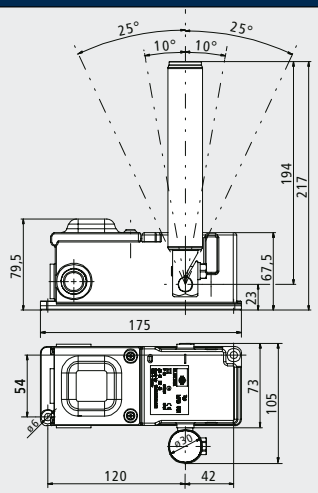

Subject to change without notice.

Vossloh Kiepe GmbH

D-40599 Düsseldorf (Germany) · Kiepe-Platz 1
Phone +49(0)2 11 74 97-0 · Fax +49(0)2 11 74 97-420
info@vkd.vossloh.com · www.vossloh-kiepe.com

473–10/05