Belt Conveyor
Pull Wire Emergency Cut-Out Switch

LRS

Leaflet No. **Kiepe 301**

APPLICATION

It is neccessary to be able to stop a conveyor at any point where a hazard may arise.
Kiepe Pull Wire Emergency Cut-Out Switches, as well as the accessories, meet every requirement for Conveyor Emergency Cut-Out Switches in accordance with the regulations for the prevention of accidents. The devices are also suitable for use on machine tools and processing equipment.

The device is intended for use in stationary installations and in vehicles.

OPERATION

The Kiepe Pull Wire Emergency Cut-Out Switches are actuated by a plastic coated steel wire rope placed alongside the conveyor. Pulling on the rope at any point or pressing the red push button will trip and automatically lock the switches, de-energizing the conveyor starter contactor. The lenght of the rope may be up to 20 meters.
After tripping, the mechanical latch can be released only on the switch. On operation, the contacts are opened by a cam thus overcomming any partial welding of the contact material should arcing occur.
Pull Wire Emergency Cut-Out Switches may only be used in control circuits.

TECHNICAL DATA

Device complies with	EN 60947-5-1, EN 418, VDE 0110, UVV-VBG 10/BGI 710
Enclosure	Cast Aluminium Alloy ALSi12
Finish	Housing yellow, RAL 1004, Push button red, RAL 3000, Reset lever blue, RAL 5010
Fixing	4 x M 5
Conduit entries	3 x M 20 x 1,5
Protection	IP 66 according to EN 60529
Grounding	Inside the housing M 4
Ambient temperature	- 25 °C ... + 70 °C
Switching System	Cam-operated switching elements, positiv making! 2 NC / 1 NO
Breaking Capacity I_e / U_e	2 A / AC 250 V
Utilization categorie	AC 15
Conventional Thermal Current I_{th}	10 A
Rated Insulation Voltage	AC 250 V
Mounting Position	Any
Ordering code	93.046 690.004

Note: This device may be used in control circuits only!

DRAWING INSTALLATION

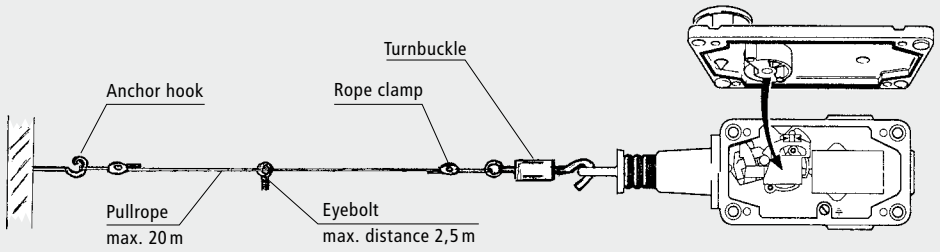

DIMENSIONS

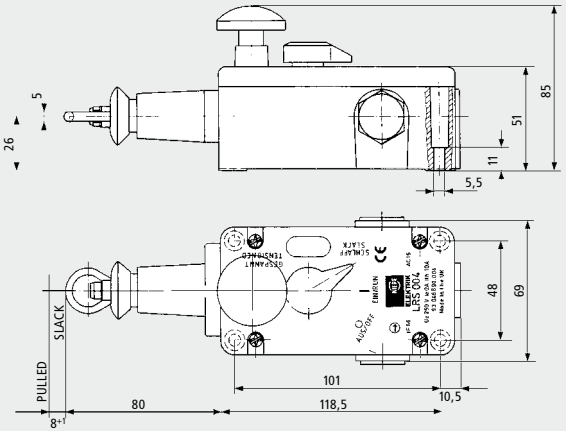

CONTACT ARRANGEMENTS

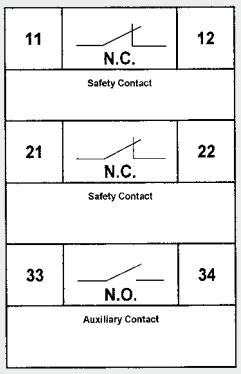

Subject to change without notice.

Vossloh Kiepe GmbH

D-40599 Düsseldorf (Germany) · Kiepe-Platz 1
Phone +49 (0) 2 11 74 97-0 · Fax +49 (0) 2 11 74 97-420
info@vkd.vossloh.com · www.vossloh-kiepe.com

301 – 10/05